AENSI Journals

Advances in Environmental Biology

ISSN-1995-0756 EISSN-1998-1066

Journal home page: http://www.aensiweb.com/aeb.html

Developing a New Low Loss and Accurate Current Measurement Technique in ac Drive Motors

[1]Abdolreza Esmaeli and [2]Mohammad Rahbar

[1]Plasma and Nuclear Fusion Research School, Nuclear Science and Technology Research, Institute, Atomic Energy Organization of Iran, P.O. Box: 14399-51113, Tehran, Iran.
[2]Islamic Azad University, Saveh Branch. Saveh,Iran, and Cosar Pharmaceutical Factory, Tehran, Iran

ARTICLE INFO

Article history:
Received 25 March 2014
Received in revised form 20 April 2014
Accepted 15 May 2014
Available online 5 June 2014

Key words:
current measurement, combined sensing, filter, compensation, calibration

ABSTRACT

Speed and Voltage sensor-less control requires current measurement that Provides accurate control with low cost, noise and Complexity. Engine current measurement is essential to eliminate torque distortion achieving uniform torque. The most common method of current estimating is inserting sensing resistance in the path of unknown current. This method incurs massive power dissipation in high output current. The resistance depend on temperature changes and tolerance. Using self-tune method is preferred for eliminating bad effect of heat temperature, components tolerance and noise. In this paper, we solve this problem with using filter-based self-tune current measurement. But the sensed current of filter based method is low and can be cut by noise and is not accepted for current control. So we can use combined method to improve SNR.

© 2014 AENSI Publisher All rights reserved.

To Cite This Article: Abdolreza Esmaeli and Mohammad Rahbar., Developing a New Low Loss and Accurate Current Measurement Technique in ac Drive Motors. ***Adv. Environ. Biol., 8(10),*** *1164-1170, 2014*

INTRODUCTION

Current measurement has many applications in power electronics and motor drives. Current measurement is used for control, protection, monitoring, and power management purposes. Parameters such as low cost, accuracy, high current measurement, isolation needs, broad frequency bandwidth, linearity and stability with temperature variations, high immunity to dv/dt, low realization effort, fast response time, and compatibility with integration process are required to ensure high performance of current sensors.

The most common current sensing method is to insert a sensing resistor in the path of an unknown current. This method incurs significant power loss in a sense resistor at high output currents. Alternatives for accurate and lossless current measurement are presented in this thesis.

Current Sensing Technique Using The Internal Resistance Of An Inductor And The Filter:

The basic idea for this technique is taken from the resistive-based current sensing using external sense resistor. At higher frequencies, the parasitic equivalent inductance of resistor R_{sense} appears. Hence, it is necessary to compensate for the parasitic inductance. The equivalent circuit of R_{sense} for this case is given in Figure 1.[1-2].

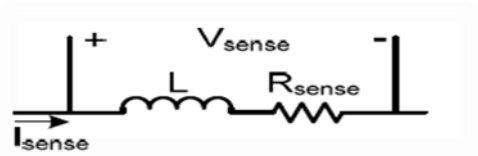

Fig. 1: Equivalent circuit of Rsense

Voltage Vsense is given by

$$V_{sense}(s) = (R_{sense} + Ls)I_{sense}(s) = K * I_{sense}(s) \quad (1)$$

Corresponding Author: Abdolreza Esmaeli, Plasma and Nuclear Fusion Research School, Nuclear Science and Technology Research, Institute, Atomic Energy Organization of Iran, P.O. Box: 14399-51113, Tehran, Iran.
E-mail: aesmaeli@aeoi.org.ir

At lower frequencies, voltage V_{sense} is proportional to current I_{sense}. At higher frequencies, gain K increases due to the parasitic inductance. A proper low pass filter, which can be active or passive, is required for compensating the gain K. If a passive R_fC_f low pass filter is used, the voltage across the filter (V_{Cf}) is then given by equation 2.

$$V_{Cf}(s) = \left(\frac{R_{sense} + Ls}{1 + R_fC_fs}\right) I_{sense}(s) \quad (2)$$

As mentioned in previous Section , inductor windings have DCR or internal resistance R_L. It is possible to use the DCR of inductor L as R_{sense} and inductor L itself as parasitic inductor in above case. Therefore, the filter-based current sensing technique uses the resistor R_L of inductor L and passive filter R_fC_f, as shown in Figure 2, for accurate current sensing. The total impedance of the R_fC_f filter is same as the total impedance of L and R_L. This technique is currently popular because of its accuracy, loss lessness, and high bandwidth. Other advantages of this technique include; continuous current measurement, low cost, PCB space saving, and power efficiency improvement.

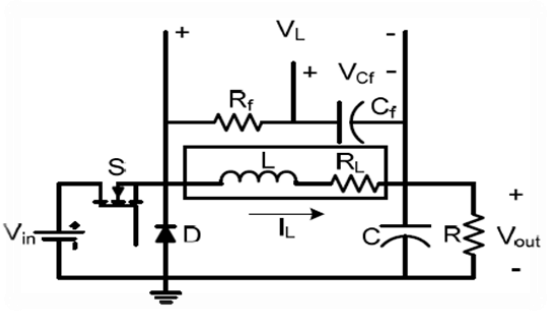

Fig. 2: Filter-based current sensing technique.

This technique detects the current I_L signal by sensing capacitor C_f voltage (V_{Cf}).
Voltage V_{Cf} is given by

$$V_{cf}(s) = I_L(S)\left(\frac{R_L + Ls}{1 + R_fC_fs}\right) \quad (3)$$

The parallel RfCf filter is designed in such a way that (4) and (5) are
Satisfied:

$$R_fC_f = \frac{L}{R_L} \quad (4)$$

$$\frac{L}{R_L} \gg T \quad (5)$$

Where $\tau_L = L/R_L$ is an inductor time constant and $\tau_C = R_fC_f$ is a low pass filter time constant. It is very difficult to satisfy (4). However, it is easy to satisfy (5) because the switching frequency is usually in the order of a few hundred kHz and resistance RL is in mili-ohms.

If (4) and (5) are satisfied, the inductor current I_L is given by

$$I_L = \frac{V_{cf}}{R_L} \quad (6)$$

Figure 3 shows the response of voltage V_{Cf} and V_{RL} when time constants τ_L and τ_C match.

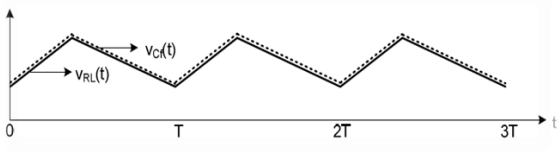

Fig. 3: Voltage V_{Cf} and VRL, when $\tau_L = \tau_C$.

It is possible that the time constants will not match; one time constant can be greater or less than the other due to the tolerance of components, temperature dependence of R_L, and change in inductance due to dc current bias. Figure 4 shows the response of voltage V_{Cf} in steady state. When switch S is on, current I_L increases at a rate of $(V_{in} - V_{out})/(L)$ and capacitor C_f gets charged.

When the freewheeling diode is on and switch S is off current I_L decreases at a rate of $(-V_{out})/L$, and capacitor C_f gets discharged. From charging and discharging rates, it is possible to find the slope of voltage V_{Cf}.

Advances in Environmental Biology, 8(10) June 2014, Pages: 1164-1170

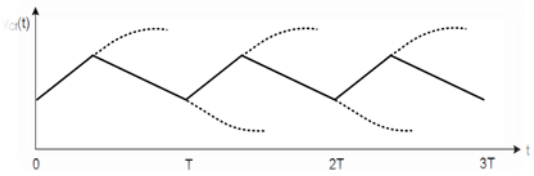

Fig. 4: Voltage V_{Cf} in steady state.

If time constants τ_L and τ_C are not matched, then peak to peak ripple of voltage V_{Cf} gets bigger or smaller than the peak-to-peak voltage ripple across resistor R_L generated by ac component of the current I_L. This will change the slew rate of voltage V_{Cf} of Figure 4.

Filter-based Current Sensing with Temperature Compensation:

An error is introduced in filter-based current sensing due to the temperature dependency of resistor R_L. To minimize this error, resistor (R_{Cf}) is added across the capacitor C_f for temperature compensation, as shown in Figure 5. R_{Cf} is the combination of resistors R_e, R_g, and R_{NTC}. R_{NTC} is a negative temperature co-efficient resistor.[3]

Resistor R_{Cf} can also use for scaling down the detected current.

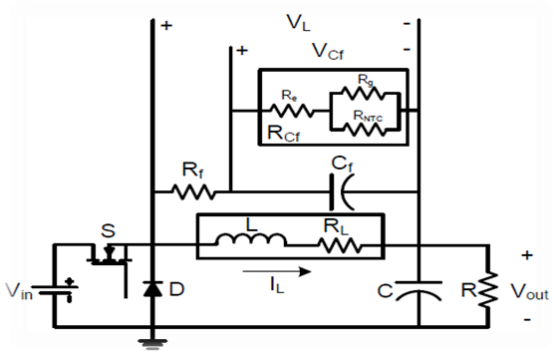

Fig. 5: Filter-based current sensing with temperature compensated network.

The addition of resistor R_{Cf} to the circuit changes the filter time constant. The new filter time constant is given by

$$\tau_c = C_f\left(\frac{R_f R_{Cf}}{(R_f + R_{Cf})}\right) \quad (7)$$

If R_{Cf} is added to the circuit and time constants τ_L and τ_C are matched, the voltage V_{Cf} is given by (8). The DC voltage on the filter capacitor is level shifted by the factor R_{Cf} / (R_{Cf}+R_f) in the presence of resistor R_{Cf}, as shown in Figure 6.

$$V_{cf} = I_L\left(\frac{R_L R_{Cf}}{(R_f + R_{Cf})}\right) \quad (8)$$

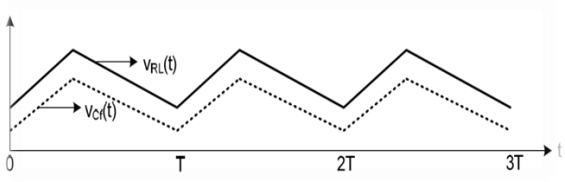

Fig. 6: Voltage V_{Cf} and V_{RL}, when $\tau_L = \tau_C$, and resistor R_{Cf} is added into the circuit.

Filter-based Current Sensing with Accurate RL:

If the filter-based current sensing technique is used for over current protection, and time constant L τ is greater than time constant τ_C , the over current protection circuit can trip at a lower than desirable current. When time constant τ_L is less than time constant τ_C , the response is opposite. This is due to the fact that the value of RL is not accurate; it is greater than the desired value. In order to deal with R_L parameter uncertainty, a modified

current sensing circuit for over current protection is shown in Figure 7. Design steps for this technique are given below:[4]

If V_1 is the tripping voltage, I_1 is the tripping current, current I_1 is given by

$$I_1 = \frac{V_1}{R_L} \tag{9}$$

In order to get actual value of R_L, a desired sense resistance R_{sense} can be calculated from below

$$R_{sense} = \frac{V_1}{I_1} \tag{10}$$

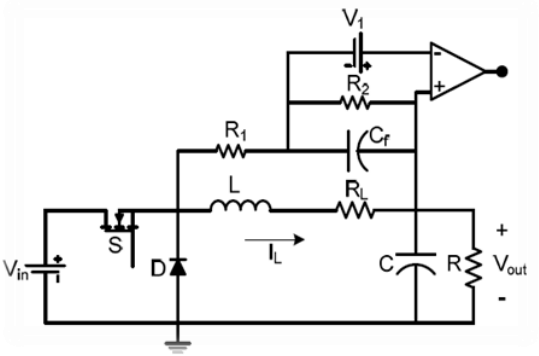

Fig. 7: Filter-based current sensing with accurate R_L.

Once the value of R_{sense} is known, then the value of inductor L can be found from the value of R_L, which can be determined by

$$R_L \geq R_{sense} \tag{11}$$

The maximum value of L at zero current and the minimum value of R_L at room temperature are measured to find value of time constant τ_C:

$$R_{Fmin} C_{Fmin} > \frac{L_{max}}{R_{L\,min}} \tag{12}$$

If R_L is greater than Rsense, then the values of resistances R_1 and R_2 must be selected in such a way that (13) is satisfied.

$$\frac{R_2}{(R_1 + R_2)} = \frac{R_{sense}}{R_L} \tag{13}$$

R_f of Figure 2 is equivalent to the resultant resistance of the parallel connection between resistors R_1 and R_2 in Figure 7. R_L of Figure 2 is equivalent to $R_L*R_2/(R_1+R_2)$ in Figure 7.

Combined-Sense Technique:

The sensed current in the filter-based current sensing has low magnitude and is susceptible to the interruption of noise, which is not acceptable in case of current-mode control. In order to solve this problem, a new technique is shown in Figure 8. This technique provides better SNR of the sensed current. Combined-sense technique includes additional switches S_3,S_4, resistor R_d, and capacitor C_d in filter-based current sensing, as depicted in Figure 8.

Switches S_3 and S_4 are connected to node b. One end of their series connection is connected to V_{in} and the other is connected to the ground. Switches S_1 and S_2 are connected to node a. RDS of switches S_1,S_4 are added into the filter according to the switching pattern. When switches S_1 and S_3 are on and S_2 and S_4 are off, the resistance of filter includes the R_{DS} of both switches S_1 and S_3. Similarly, when switches S_2 and S_4 are on and S_1 and S_3 are off, the resistance of filter includes the RDS of both switches S_2 and S_4. In this way, the current can be sensed at any time during the cycle. The increased sense circuit resistance increases the voltage V_{Cf}, so the output signal is clean and less susceptible to noise. When the switches change their states from on to off or off to on, they temporarily fall into off state. The resistor R_d and capacitor C_d work as a low pass filter (R_dC_d) during this dead time to block the high frequency transient signal from affecting the current sense signal. The R_dC_d filter is also synchronize the operation of nodes a and b.

Voltages at points a and b (V_a and V_b) are depicted in Figure 9. Voltage V_a is a bit lower than voltage V_{in} and voltage V_b is approximately same as voltage V_{in}. Because the rating of switches S_1 and S_2 are higher than the ratings of switches S_3 and S_4. Filter R_dC_d averages the voltage difference for cleaner and exact current measurement.[5]

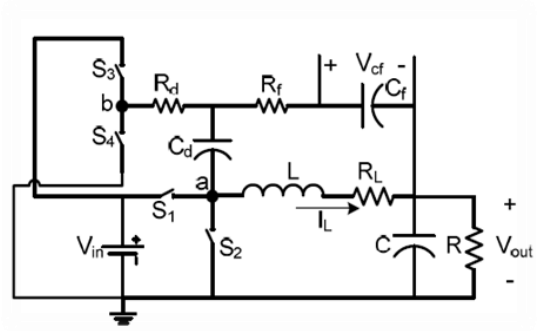

Fig. 8: Combined-sense technique.

To achieve continuous current measurement with accuracy, loss lessness, low switching noise, and high bandwidth, a modified technique is introduced as in Figure 10.

The sensed circuit is calibrated and tuned during the start-up and the inductor current is measured during normal operation, which ensures accuracy along with continuous current measurement benefits. The g_mC_f filter is a first order low pass filter. It is designed separately for each application as the inductor specifications are determined resistance R_f are variable. It is possible to change the frequency f_c by changing the value of R_f and to change the filter gain by changing the value of gm. The g_mC_f filter gives accurate current measurement after tuning and calibration.

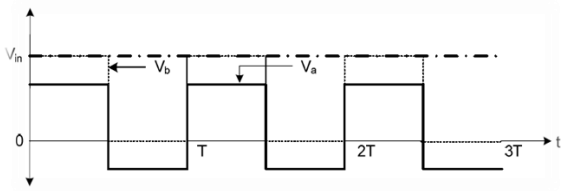

Fig. 9: Voltages V_a and V_b in combined-sense technique.

By applying voltage V_L to a g_mC_f filter, whose voltage frequency response matches the current response of the inductor, one can write

$$I_L(S)\left(\frac{(R_L)+Ls}{1+R_fC_fs}\right)V_{cf}(s)=g_mR_f \tag{14}$$

If R_f is adjusted to match the both time constants (equation (4)), current I_L is given by

$$I_L=\left(\frac{V_{cf}}{(g_mR_f)R_L}\right) \tag{15}$$

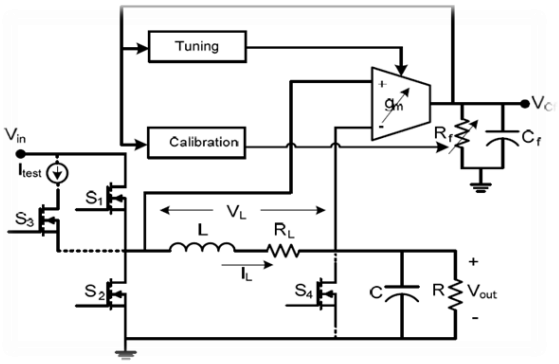

Fig. 10: Filter-based technique with self-tuning and self-calibration.

Here, $(g_mR_f)R_L$ is current sensing gain, which can be adjusted to any value by changing R_f and or g_m. Tuning and calibration are performed during the start-up to adjust the filter gain-bandwidth product and filter dc gain for accurate current measurement, as shown in Figure 11.

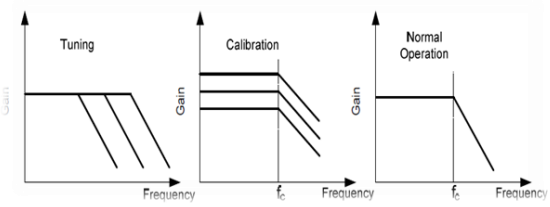

Fig. 11: Tuning, calibration, and normal operation for filter-based current sensing technique.

As tuning and calibration are performed during the start-up, switches S_1 and S_2 are kept disabled, so no power is lost during normal operation. This technique measures the inductor current during normal operation. Switches S_1 and S_2 are kept off and switches S_3 and S_4 are turned on during start-up for tuning purpose, as shown in Figure 10. A small AC test current, triangular in shape, is injected into the circuit, as shown in Figure 12.[6]

The test current's frequency is high enough that the voltage across inductor is dominated by inductance L and not by resistance R_L because inductor impedance is higher than resistance R_L at higher frequencies. The resulting ac voltage signal across inductor L is a square wave. The g_mC_f filter converts this square wave voltage V_L into the triangular wave voltage V_L because capacitor impedance is smaller than resistance R_f at higher frequency. $R_{esistor}$ R_f is kept at its minimum value to reduce the DC offset during the tuning process. The filter output is then buffered and the DC component is removed.

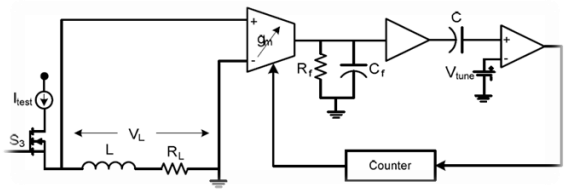

Fig. 12: Tuning operation for filter-based current sensing technique.

The peak of the AC portion of voltage V_{Cf} matches with the tune voltage V_{tune} by adjusting g_m. Once both voltages are matched, the comparator stores their values and sends a stop signal to the counter. The calibration phase immediately follows the tuning cycle. A small DC test current is supplied to the inductor for calibration, as shown in Figure 13. The value of filter resistance R_f is adjusted in the calibration process to match V_{Cf} with the calibration voltage V_{cali}.

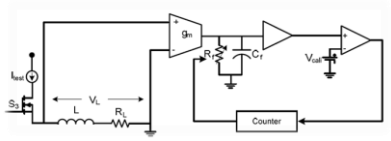

Fig. 13: Calibration operation for filter-based current sensing technique.

During tuning g_mC_f filter's cutoff frequency is matched with the inductor's cutoff frequency, so (16) is satisfied. During the calibration process, the current sensing gain $(g_mR_f)R_L$ is adjusted to any value. If the value of the gain $(g_mR_f)R_L$ is set to 1 ohm, then the value of V_{Cf} can directly provide information about inductor current

$$I_L = V_{cf} \tag{16}$$

Once tuning and calibration parameters are properly set and stored, the converter is allowed to operate normally.

Conclusion:

Current measurement has many applications in power electronics and motor drives. Current measurement is used for control, protection, monitoring, and power management purposes. Parameters such as low cost, accuracy, high current measurement, isolation needs, broad frequency bandwidth, linearity and stability with temperature variations, high immunity to dv/dt, low realization effort, fast response time, and compatibility with integration process are required to ensure high performance of current sensors. In most methods, measurement accuracy is depend on certain parameters such as resistance value in resistor-based current sensing.

This value is exposed to temperature changes and inaccuracy. It is better to use self-tuning methods in order to remove undesirable effects resulting from temperature, component tolerance and noise. Current is sensitive to component temperature, noise and operation conditions. The solution is to use self-tuning(self-calibration) methods in which parameter will be self-tuned. In this article, we examine filter-based current sensing with self-tuning in order to overcome this problem. Since current has a law value and susceptible to noise cut-off, hence it is not accepted for controlling the current condition. Thus combined sensing method can be used as an alternative. Advantages are: loss lessens, accuracy, low switching noise, continuous current measurement, increasing SNR ratio and also matching time constants.

REFERENCE

[1] Abdolreza Esmaili and Yaser Noori Shirazi, 2013. Combined current sensing in power electronic applications for increasing SNR ratio, International Research Journal of Applied and Basic Sciences, 5(9): 1155-1163.
[2] Forghani-zadeh, H. and G. Rincon-Mora, 2005. "A lossless, accurate, self-calibrating current-sensing technique for DC-DC converters," in 32nd Annual Conference of IEEE Industrial Electronics Society, 6-10.
[3] Lei, H. and L. Shiguo, 2006. "Design considerations of time constant mismatch problem for inductor DCR current sensing method," in 21st Annual IEEE Applied Power Electronics Conference and Exposition, 19-23.
[4] LINFINITY, 2007. Application Note AN-7: A simple-current sense technique eliminating a sense resistor. (Last visited: 7th November 2007)
[5] Forghani-zadeh, H. and G. Rincon-Mora, 2007. "An Accurate, Continuous, and Lossless Self-Learning CMOS Current-Sensing Scheme for Inductor-Based DC-DC Converters," IEEE Journal of Solid-State Circuits, 42: 665-679.
[6] An integrated, lossless, and accurate current- sensing system for high performance dc-dc converters, Microsoft PowerPoint - gtac_s04.ppt.